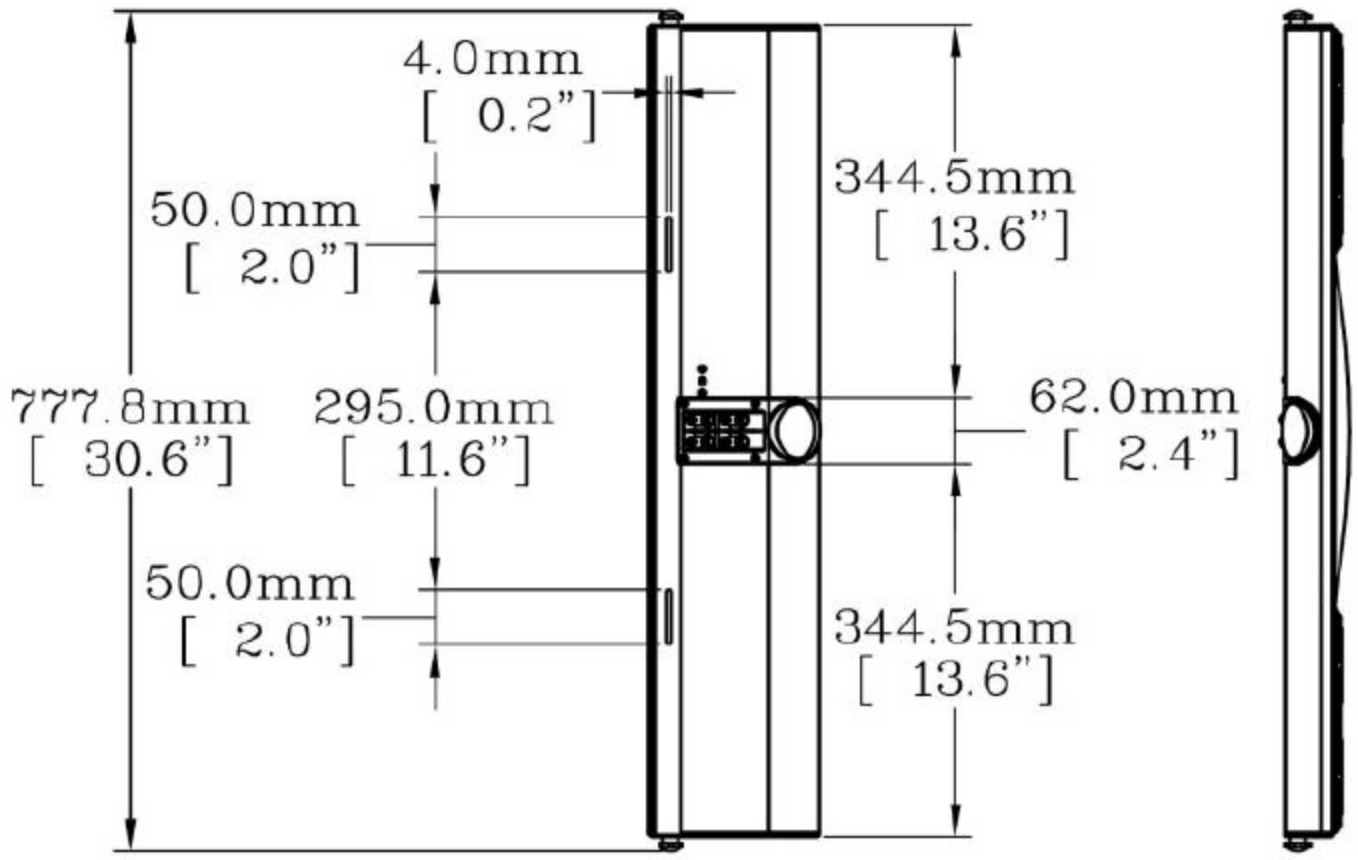
4.0mm
[0.2"]
50.0mm
[2.0"]
344.5mm
[13.6"]
777.8mm
[30.6"]
295.0mm
[11.6"]
62.0mm
[2.4"]
50.0mm
[2.0"]
344.5mm
[13.6"]

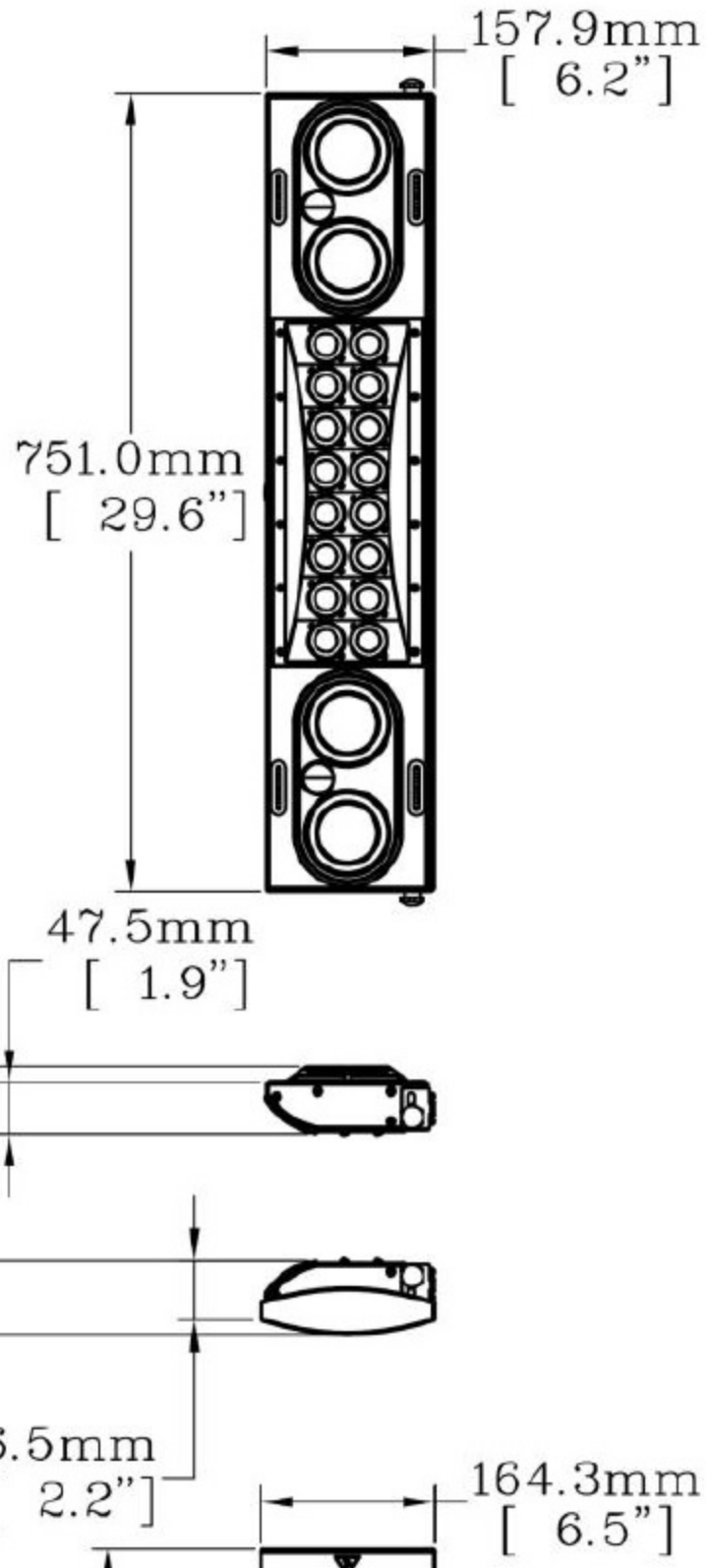
157.9mm
[6.2"]
751.0mm
[29.6"]
47.5mm
[1.9"]
63.0mm
[2.5"]
69.9mm
[2.8"]
56.5mm
[2.2"]

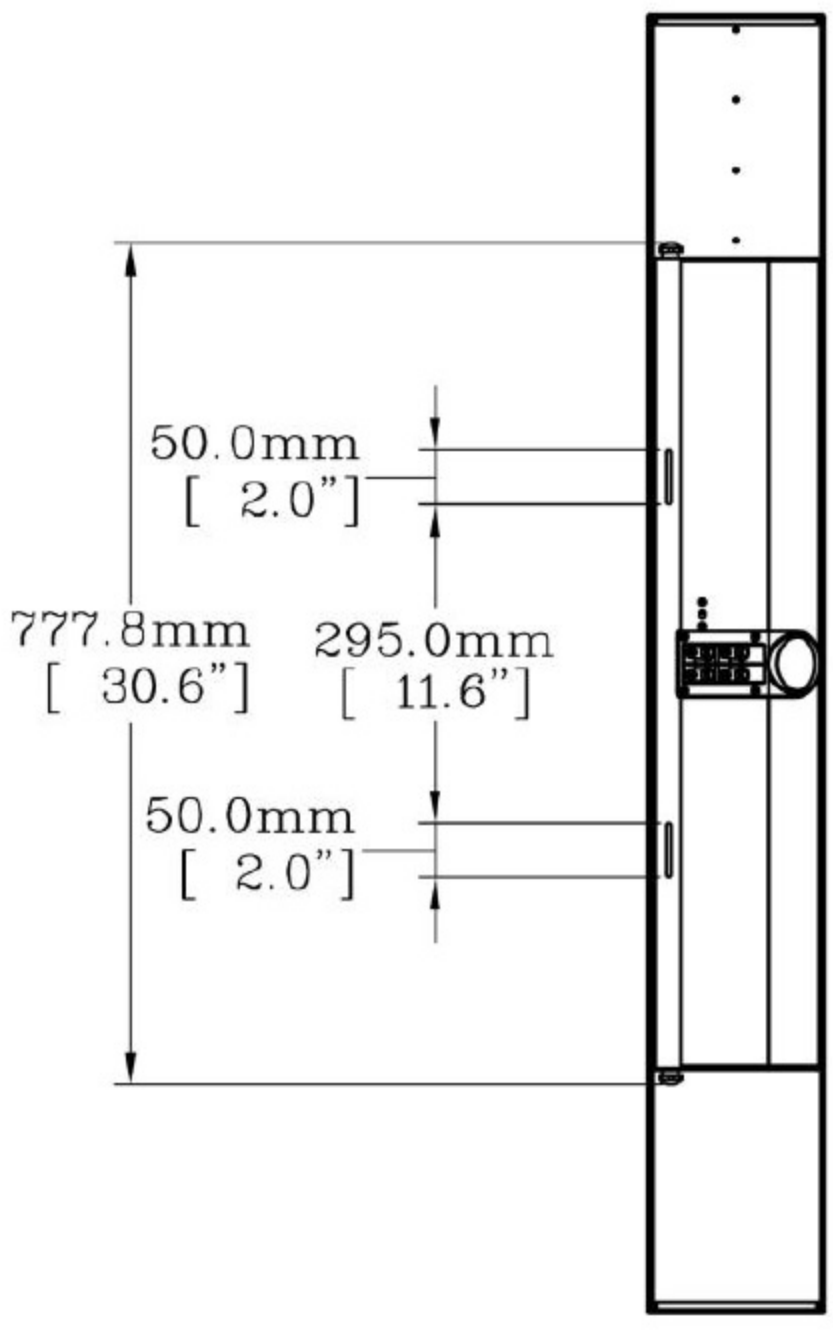
50.0mm
[2.0"]
777.8mm
[30.6"]
295.0mm
[11.6"]
50.0mm
[2.0"]

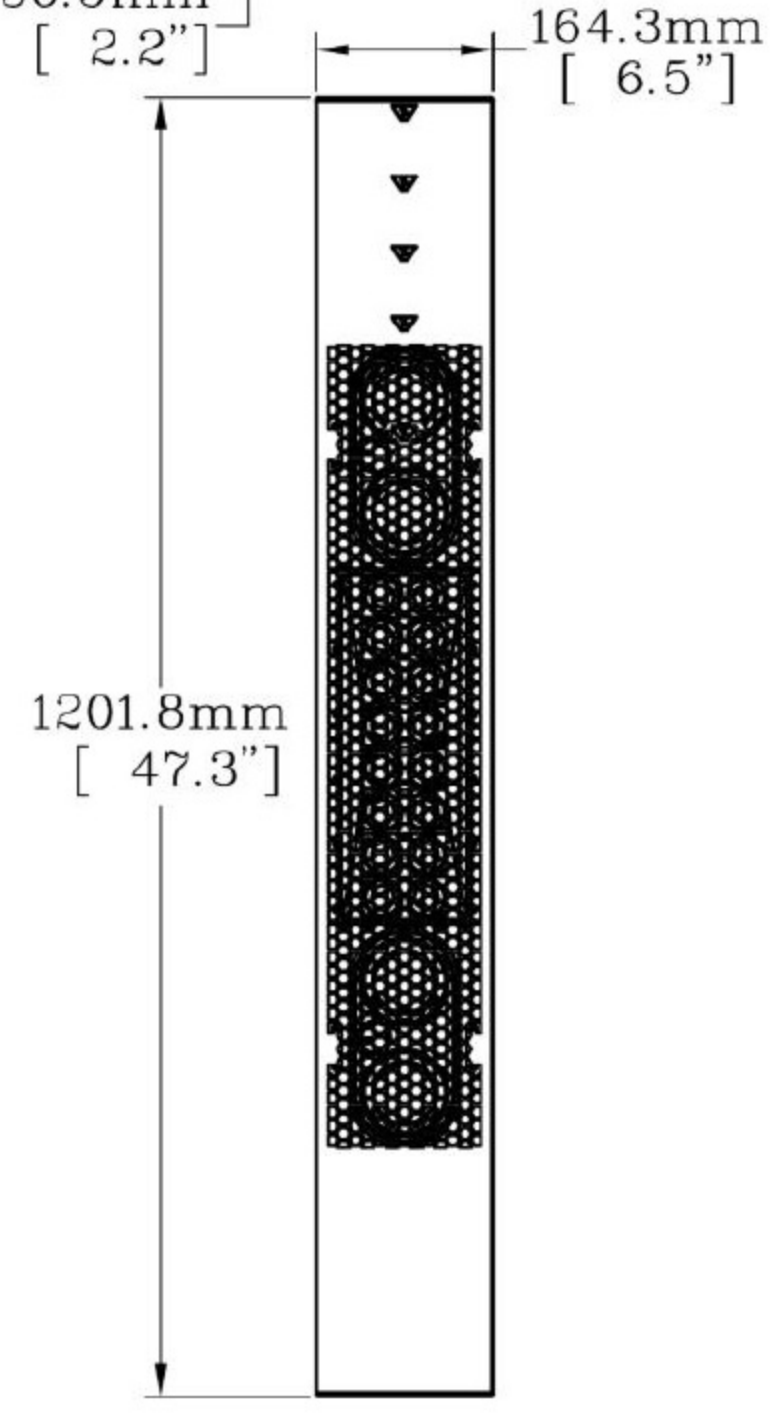
164.3mm
[6.5"]
1201.8mm
[47.3"]